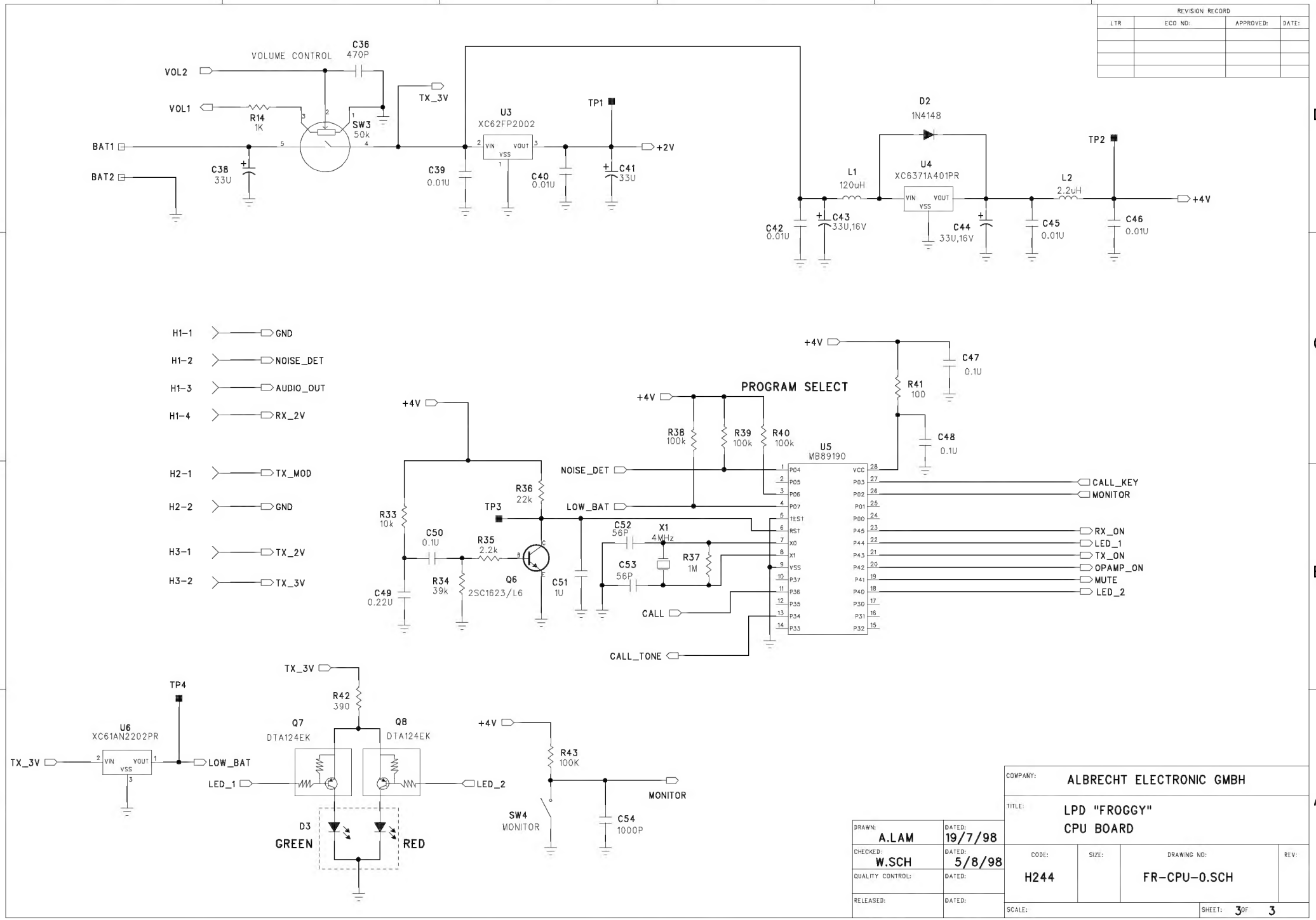
VOLUME CONTROL
C36
470P
VOL2
VOL1
R14
1K
SW3
50k
BAT1
BAT2
C38
33U
TX_3V
U3
XC62FP2002
VIN
VOUT
VSS
C39
0.01U
C40
0.01U
TP1
C41
33U
+2V
D2
1N4148
L1
120uH
U4
XC6371A401PR
C42
0.01U
C43
33U,16V
C44
33U,16V
L2
2.2uH
TP2
C45
0.01U
C46
0.01U
+4V
H1-1
H1-2
H1-3
H1-4
H2-1
H2-2
H3-1
H3-2
GND
NOISE_DET
AUDIO_OUT
RX_2V
TX_MOD
GND
TX_2V
TX_3V
PROGRAM SELECT
R41
100
C47
0.1U
C48
0.1U
R38
100k
R39
100k
R40
100k
U5
MB89190
R36
22k
TP3
R33
10k
C50
0.1U
R35
2.2k
R34
39k
Q6
2SC1623/L6
C49
0.22U
C51
1U
C52
56P
X1
4MHz
C53
56P
R37
1M
LOW_BAT
CALL
CALL_TONE
CALL_KEY
MONITOR
RX_ON
LED_1
TX_ON
OPAMP_ON
MUTE
LED_2
TP4
U6
XC61AN2202PR
LOW_BAT
R42
390
Q7
DTA124EK
Q8
DTA124EK
D3
GREEN
RED
R43
100K
SW4
MONITOR
C54
1000P
REVISION RECORD
LTR
ECO NO:
APPROVED:
DATE:
COMPANY:
ALBRECHT ELECTRONIC GMBH
TITLE:
LPD "FROGGY"
CPU BOARD
DRAWN:
A.LAM
DATED:
19/7/98
CHECKED:
W.SCH
DATED:
5/8/98
QUALITY CONTROL:
DATED:
RELEASED:
DATED:
CODE:
H244
SIZE:
DRAWING NO:
FR-CPU-0.SCH
REV:
SCALE:
SHEET: 3 OF 3